LEGENDA
LEGENDE
DESCRIPTION

① = Zastosowanie
Verwendung
Application

② = Akcesoria Fischer Automotive
Anbauteil von Fischer Automotive
Mounting Parts of Fischer Automotive

③ = N.A. Niedostępny
N.A. Keine Produktion
N.A. Not available

④ = Numer Oryginalny
Original Nummer
Original Number

⑤ = 16.087 Nr Tłumika
16.087 Schalldämpfernummer
16.087 Silencer Number

⑥ = ▲
tylko na zamówienie
Keine Lagerware, nur auf Bestellung
No storage Parts, only on order

CAT

500
Hatchback, Cabrio
1.4i - 16V
10/**07** -
(1386 cc), 74 KW

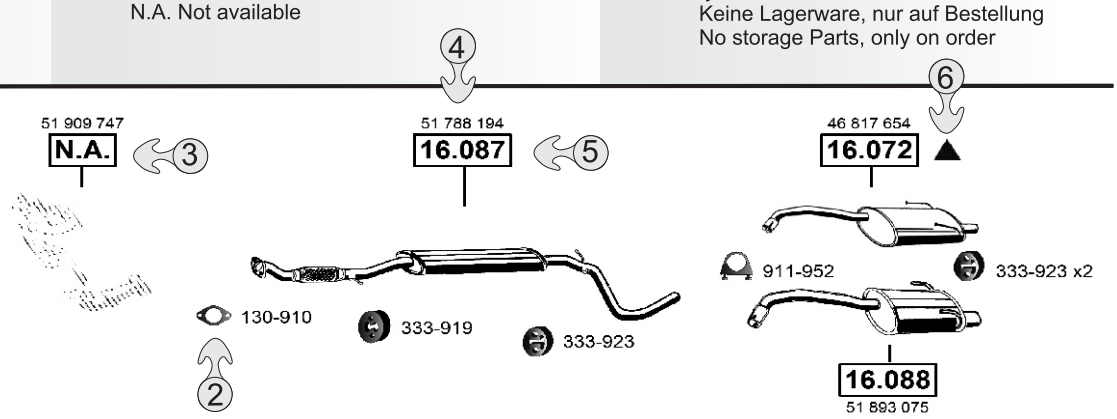

OFERTA SPECJALNA SPEZIALANGEBOT SPECIAL OFFER

KIELICHY VERBINDUNGEN CONNECTIONS

Nr Asmet 0A.019

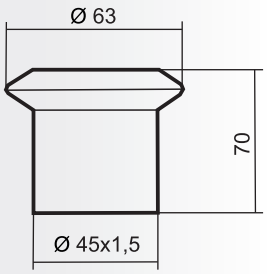

Nr Asmet 0A.017

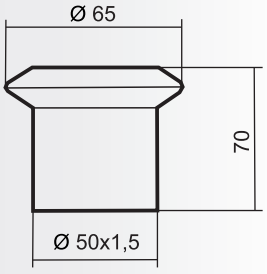

Nr Asmet 0A.015

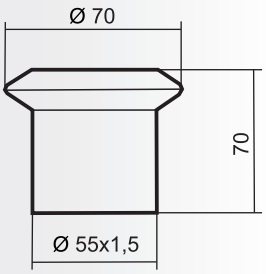

Nr Asmet 0A.018

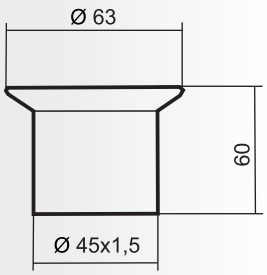

Nr Asmet 0A.016

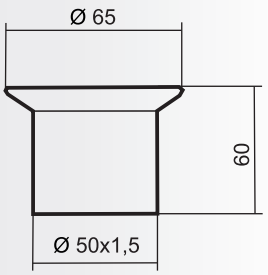

Nr Asmet 0A.014

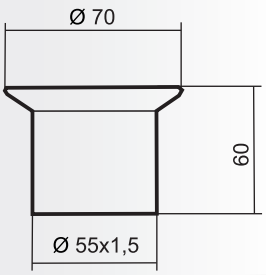

RURY ROHRE PIPES

Asmet Nr	d	L
0C.001	40 x 1,5 mm	2000 mm
0C.002	43 x 1,5 mm	2000 mm
0C.003	45 x 1,5 mm	2000 mm
0C.004	50 x 1,5 mm	2000 mm
0C.005	55 x 1,5 mm	2000 mm
0C.006	60 x 1,5 mm	2000 mm

d = zew. średnica
Aussendurchmesser
Outside Diameter

L = długość
Länge
Lenght

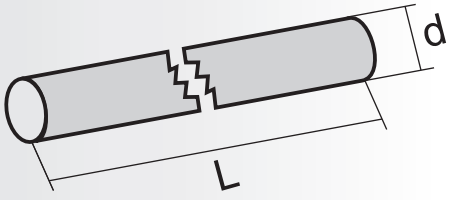

FISCHER AUTOMOTIVE

AKCESORIA MONTAŻOWE MONTAGEZUBEHÖR MOUNTING ACCESSORIES

ASMET Sp. z o.o. nie jest dystrybutorem zamieszczonych w katalogu akcesoriów montażowych.
Zamieszczone w katalogu akcesoria mają charakter wyłącznie informacyjny i poglądowy.

ASMET Sp. z o.o. ist nicht der Verkäufer des im Katalog genannten Montagezubehörs.
Das im Katalog sichtbare Zubehör hat einen ausschließlich Informations- und Anschauungscharakter.

ASMET Sp. z o.o. - Is not a distributor of mounting accessories included in the catalog.
There are only for illustrative and indicative purposes.

ZŁĄCZNIKI RUR ROHRVERBINDER PIPE CONNECTORS



ID = wew. średnica
Innendurchmesser
Inside Diameter

L = długość
Länge
Lenght

Fischer Nr	ID	L
004-936	36 mm	95 mm
004-938	38 mm	95 mm
004-940	40 mm	125 mm
004-941	40 mm	90 mm
004-943	43 mm	90 mm
114-943	43 mm	125 mm
004-944	44 mm	125 mm
004-945	45 mm	125 mm
114-946	46 mm	90 mm
004-948	48 mm	90 mm
114-950	50 mm	125 mm

Fischer Nr	ID	L
114-951	50 mm	110 mm
114-952	50 mm	90 mm
004-955	55 mm	80 mm
114-956	56 mm	125 mm
114-957	56 mm	95 mm
004-958	58 mm	90 mm
004-960	60 mm	80 mm
114-960	60 mm	95 mm
114-961	60 mm	125 mm
004-965	65 mm	80 mm
004-970	70 mm	80 mm

OBEJMY SCHELLEN CLAMPS



M8
Universall

Fischer Nr	ID
911-936	36 mm
911-938	38 mm
911-940	40 mm
911-942	42 mm
911-945	45 mm
911-948	48 mm
911-950	50 mm
911-952	52 mm
911-954	54 mm
911-956	56 mm
911-958	58 mm
911-960	60 mm
911-965	65 mm
911-970	70 mm
911-975	75 mm



M10
Universall

Fischer Nr	ID
913-936	36 mm
913-938	38 mm
913-940	40 mm
913-942	42 mm
913-945	45 mm
913-948	48 mm
913-950	50 mm
913-952	52 mm
913-954	54 mm
913-956	56 mm
913-958	58 mm
913-960	60 mm
913-965	65 mm
913-970	70 mm
913-975	75 mm



Renault

Fischer Nr	ID
932-947	47 mm
932-949	49 mm
932-953	53 mm
932-958	58 mm
932-966	66 mm
932-969	69 mm
932-972	72 mm
932-979	79 mm



Citroen

Fischer Nr	ID
931-947	47 mm
931-949	49 mm
931-953	53 mm
931-958	58 mm
931-966	66 mm
931-969	69 mm

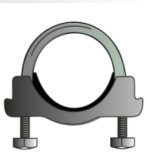

M10
Ford

Fischer Nr	ID
921-938	38,5 mm
921-940	40,5 mm
921-941	41,5 mm
921-943	43,5 mm
921-945	45,5 mm
921-948	48,5 mm
921-949	49,5 mm
921-950	50,5 mm
921-951	51,5 mm
921-952	52,5 mm
921-953	53,5 mm
921-954	54,5 mm
921-955	55,5 mm
921-957	57,0 mm
921-958	58,5 mm
921-959	59,5 mm
921-960	60,0 mm
921-962	62,0 mm
921-964	64,0 mm



VAG
Audi
Seat
Skoda
Volkswagen

Fischer Nr	ID
951-938	38,5 mm
951-941	41,5 mm
951-942	42,5 mm
951-943	43,5 mm
951-944	44,5 mm
951-945	45,5 mm
951-946	46,7 mm
951-948	48,5 mm
951-949	49,5 mm
951-950	50,5 mm
951-951	51,5 mm
951-952	52,3 mm
951-953	53,5 mm
951-954	54,5 mm
951-955	55,5 mm
951-958	58,5 mm
951-960	60,5 mm
951-962	62,5 mm
951-964	64,5 mm

Citigo	3
Fabia	3
Fabia II	4
Fabia III	5
Favorit	7
Felicia	8
Octavia	9
Octavia II	10
Rapid	12
Roomster	12
Superb	13

SKODA

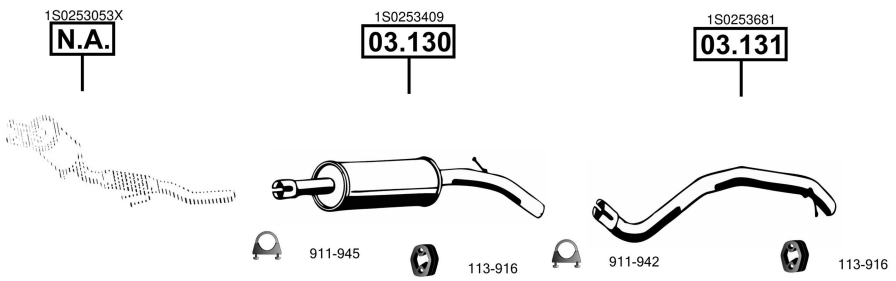

CAT

Citigo
Liftback
1.0 i
10/**11**- 08/**19**
(999 cc), 44 kW
(999 cc), 55 kW

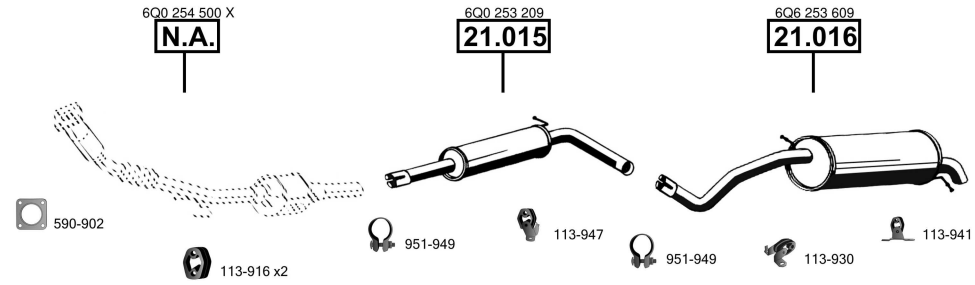

CAT

Fabia
Hatchback
1.0 i
12/**99**- 08/**02**
(997 cc), 37 kW

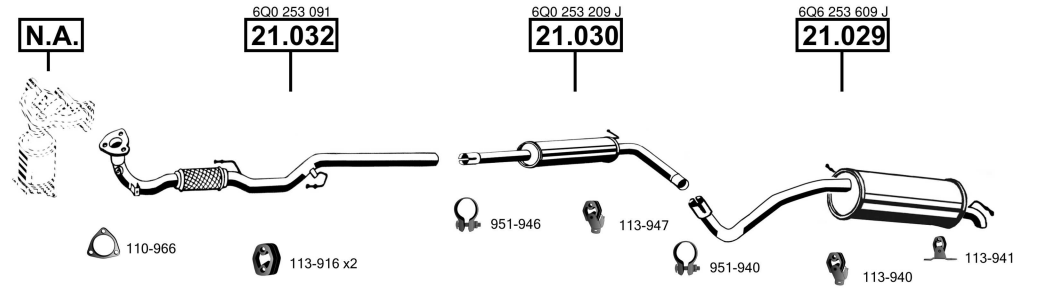

CAT

Fabia
Hatchback
1.2 i
07/**01**- 10/**05**
(1198 cc), 40 KW

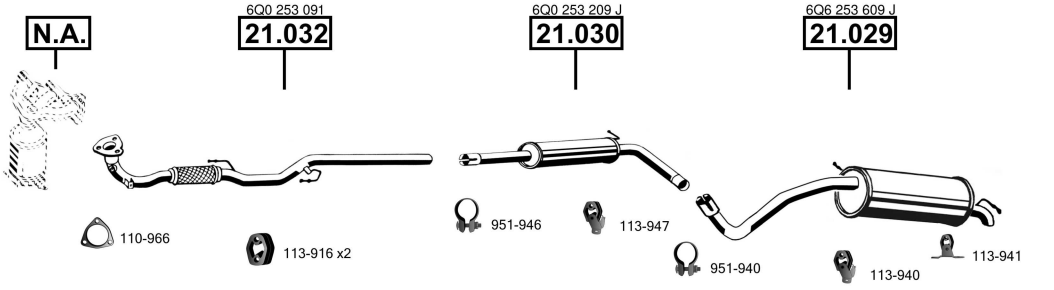

CAT

Fabia
Hatchback
1.2 i - 12V
01/**03**- 10/**05**
(1198 cc), 47 KW

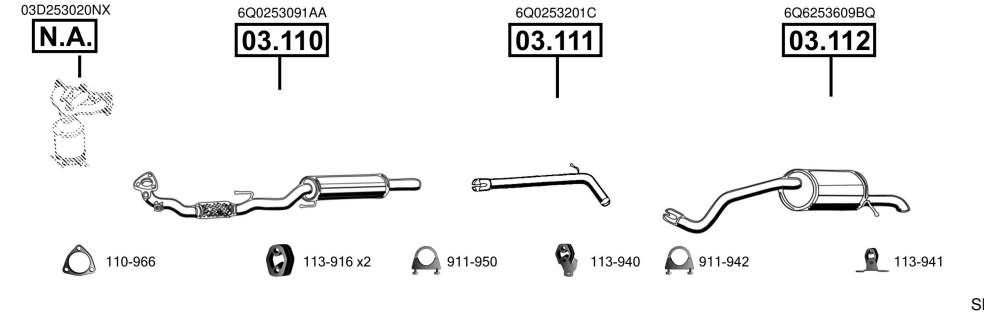

CAT

Fabia
Hatchback
1.2 i
10/**05**- 03/**08**
(1198 cc), 40 kW
(1198 cc), 47 kW

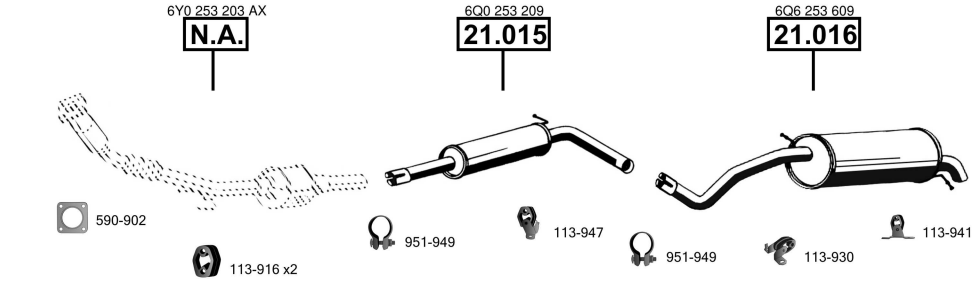

CAT

Fabia
Hatchback
1.4 i
12/**99**- 03/**08**
(1397 cc), 44 KW
(1397 cc), 50 KW

CAT

Fabia
Hatchback
1.4 i - 16V
12/**99**- 03/**08**
(1390 cc), 55 KW

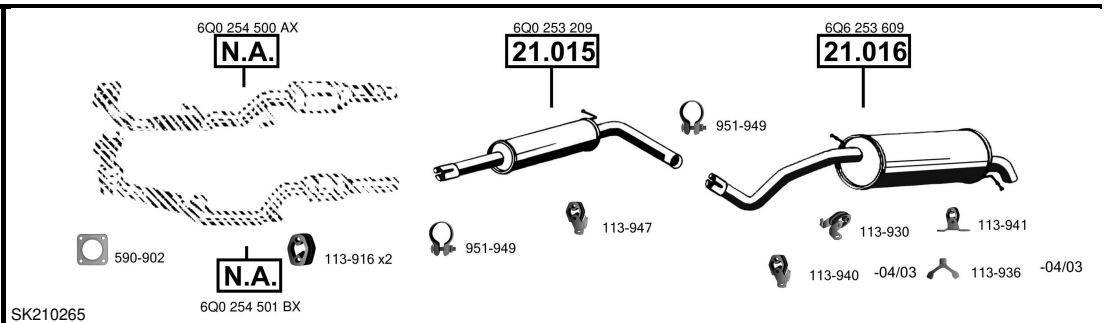

SK210265

CAT

Fabia
Hatchback
1.4 i - 16V
12/**99**- 03/**08**
(1390 cc), 74 KW

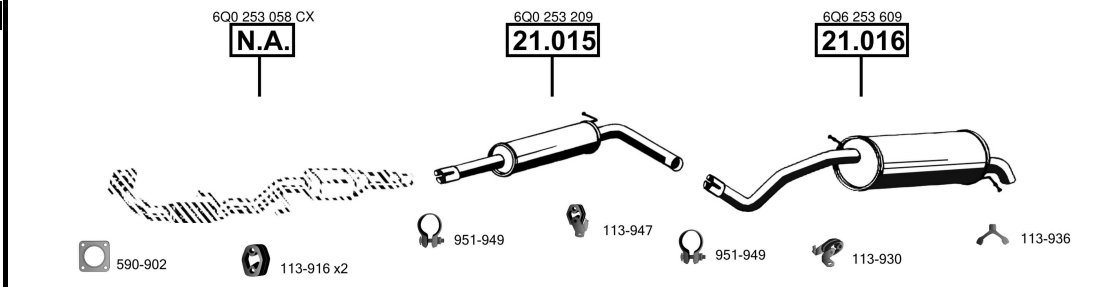

SK210290

CAT

Fabia
Hatchback
1.4 i - 16V
01/**07** -
(1390 cc), 63 KW

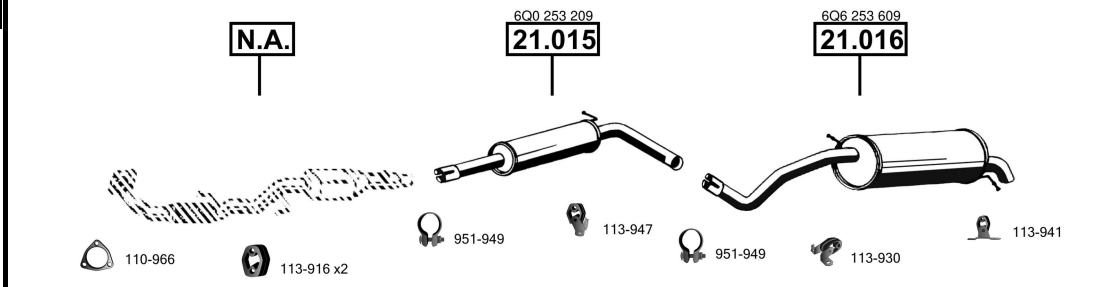

SK210295

CAT

Fabia
Hatchback
1.4 TDi
Diesel
04/**03** -
(1422 cc), 51 KW
(1422 cc), 55 KW

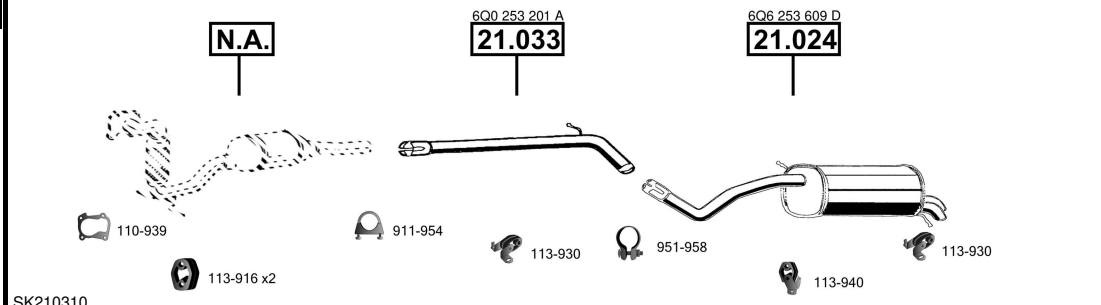

SK210310

CAT

Fabia II
Hatchback
1.4 TDi
Diesel
02/**07**- 03/**10**
(1422 cc), 51 kW;
(1422 cc), 59 kW;

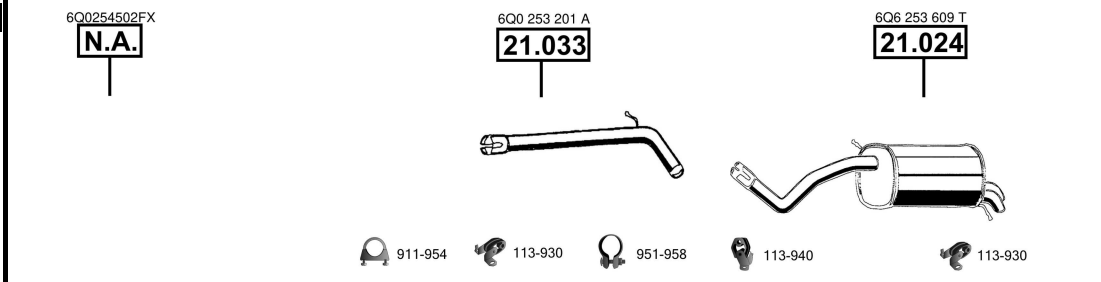

SK210315

CAT

Fabia
Hatchback
1.9 SDi
Diesel
12/**99**- 03/**08**
(1896 cc), 47 KW

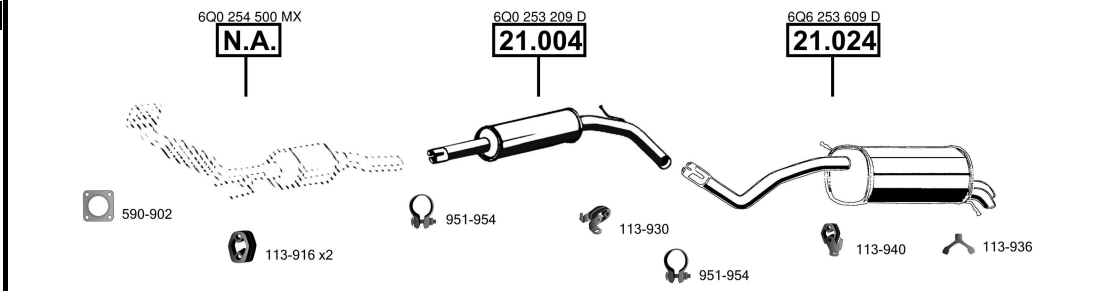

SK210320

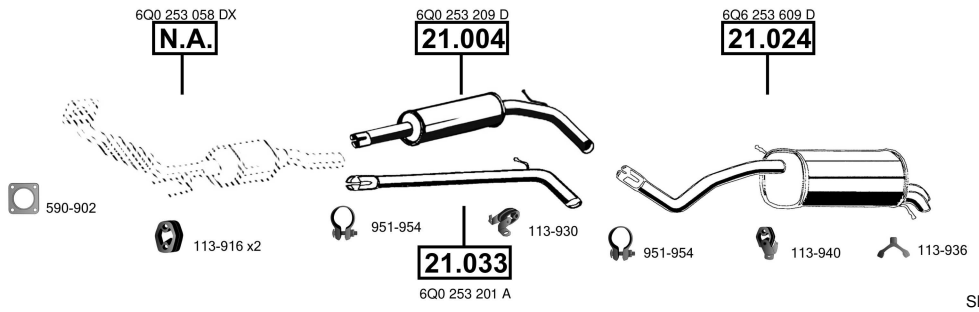

CAT

Fabia
Hatchback
1.9 TDi
Diesel
01/**00**- 03/**08**
(1896 cc), 74 KW

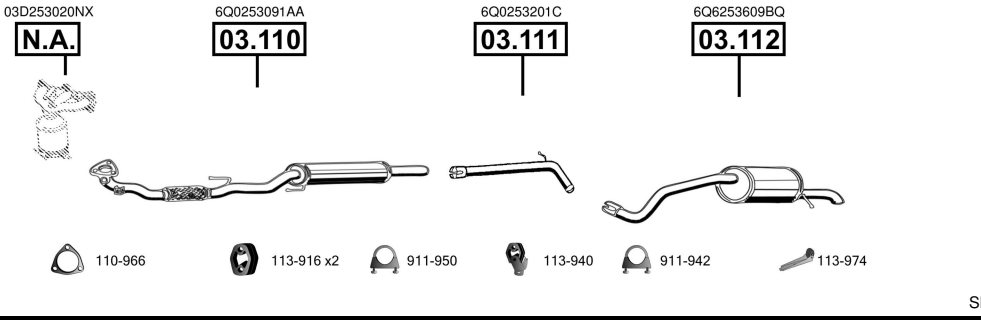

CAT

Fabia
Hatchback
1.2 i
12/**06**-
(1198 cc), 44 kW
(1198 cc), 51 kW

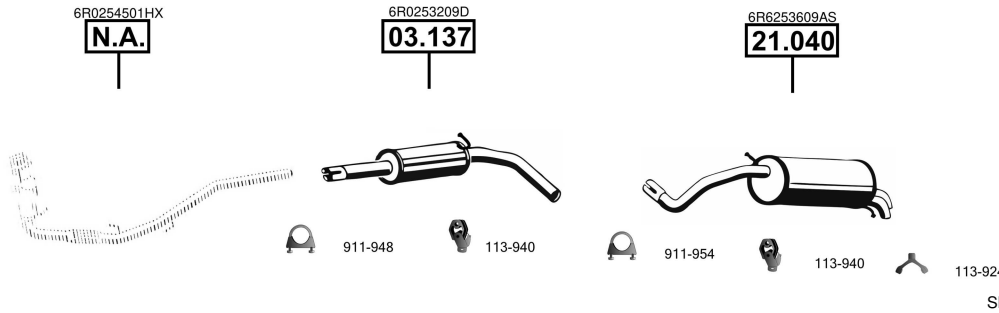

CAT

Fabia II
Hatchback
1.2 TSi
03/**10**- 05/**15**
(1197 cc), 63 kW,
(1197 cc), 77 kW,

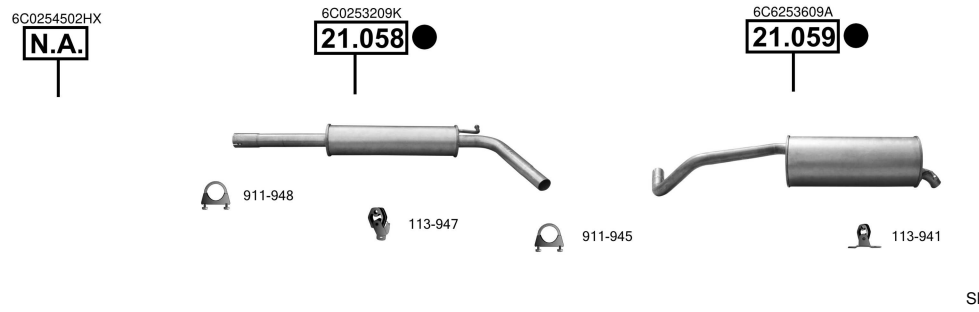

CAT

Fabia III
Liftback, Combi
1.0 MPi
08/**14**- 06/**21**
(999 cc), 44 kW;
(999 cc), 55 kW;

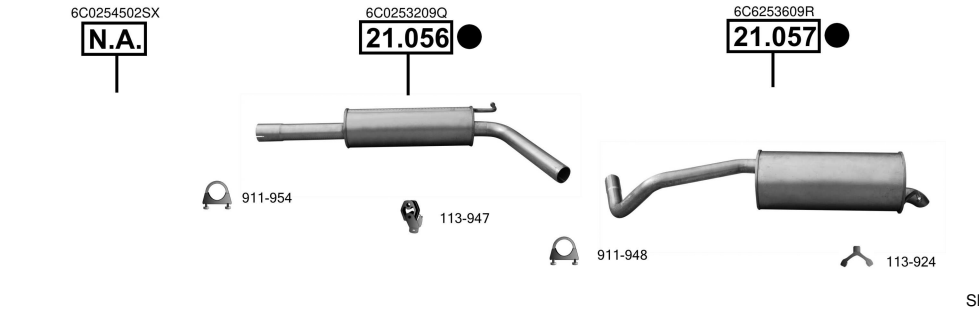

CAT

Fabia III
Liftback
1.0 TSi
08/**14**- 06/**21**
(999 cc), 70 kW;
(999 cc), 81 kW;

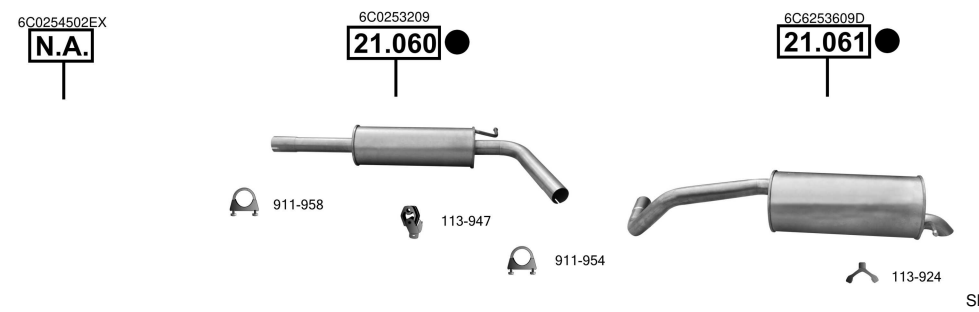

CAT

Fabia III
Liftback
1.2 TSi
08/**14**- 06/**21**
(1197 cc), 66 kW;
(1197 cc), 81 kW

CAT

Fabia
Combi, Sedan
1.2 i
07/**01**- 10/**05**
(1198 cc), 40 KW
(1198 cc), 47 KW

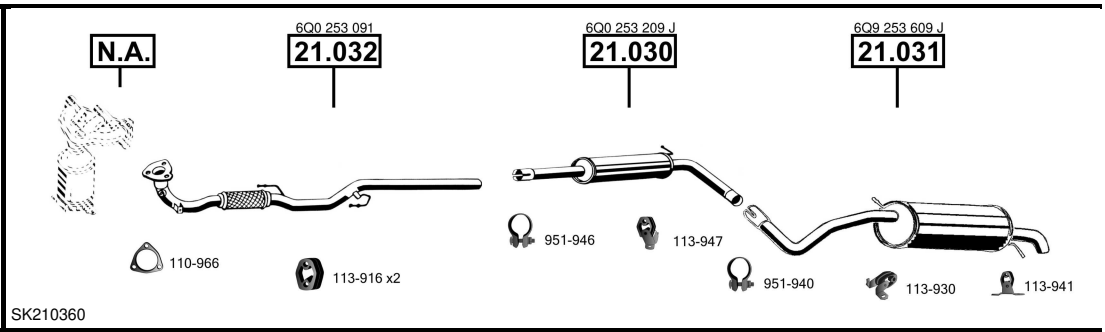

SK210360

CAT

Fabia
Sedan
1.2 i
10/**05**- 12/**07**
(1198 cc), 40 kW
(1198 cc), 47 kW

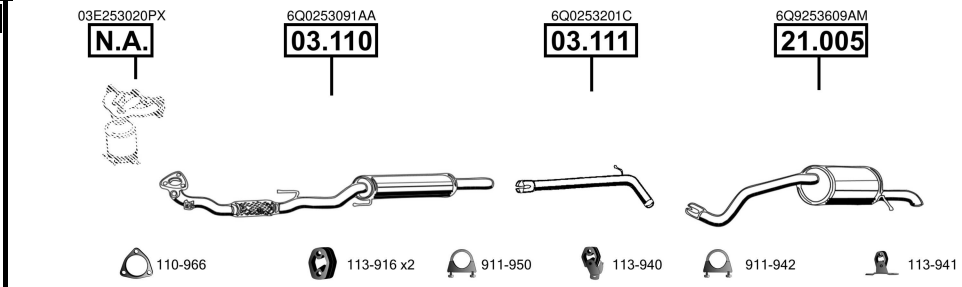

SK210365

CAT

Fabia
Combi
1.2 i
10/**07**- 12/**14**
(1198 cc), 44 kW
(1198 cc), 51 kW

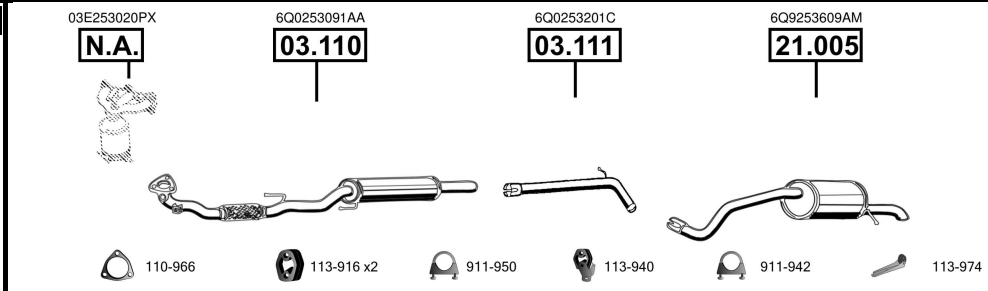

SK210375

CAT

Fabia
Combi, Sedan
1.4 i
02/**00**- 05/**03**
(1397 cc), 44 KW
(1397 cc), 50 KW

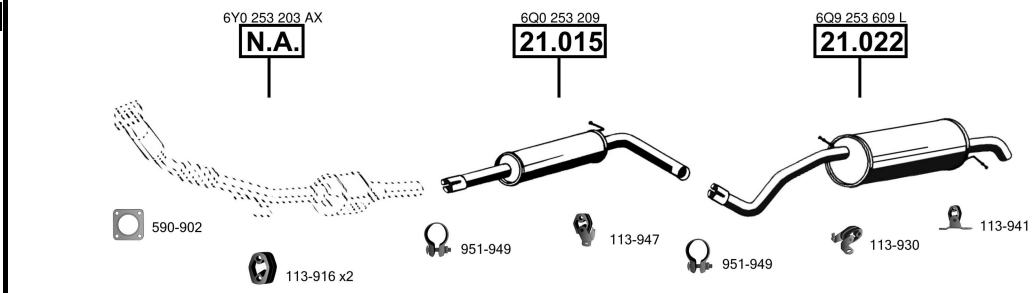

SK210400

CAT

Fabia
Combi, Sedan
1.4 i - 16V
01/**00**- 12/**07**
(1390 cc), 55 KW

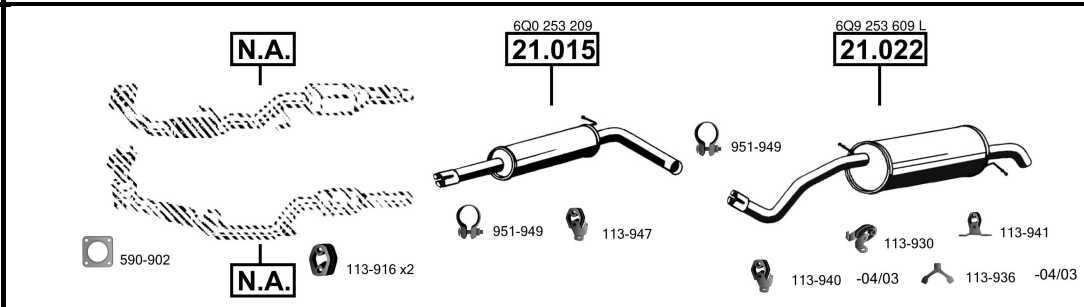

SK210410

CAT

Fabia
Combi, Sedan
1.4 i - 16V
04/**06**- 12/**07**
(1390 cc), 59 KW

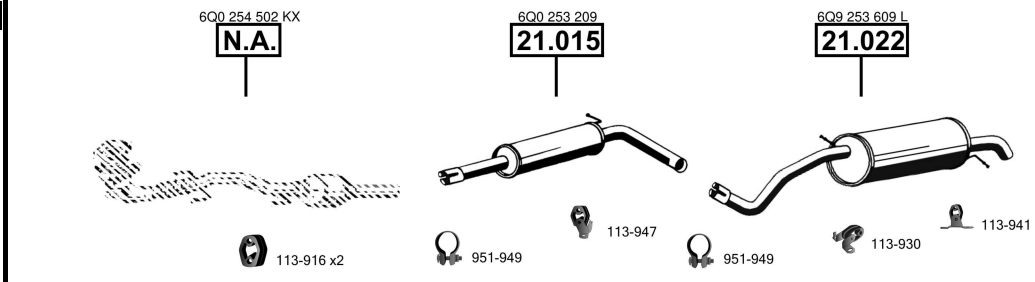

SK210416

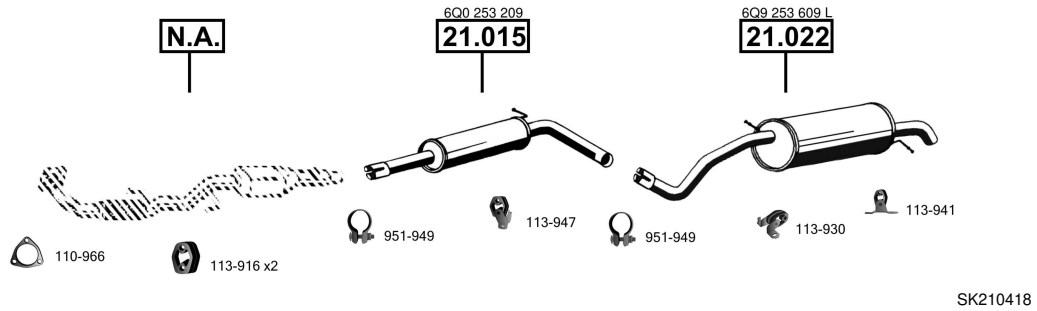

CAT

Fabia
Combi
1.4 i - 16V
01/**07** -
(1390 cc), 63 KW

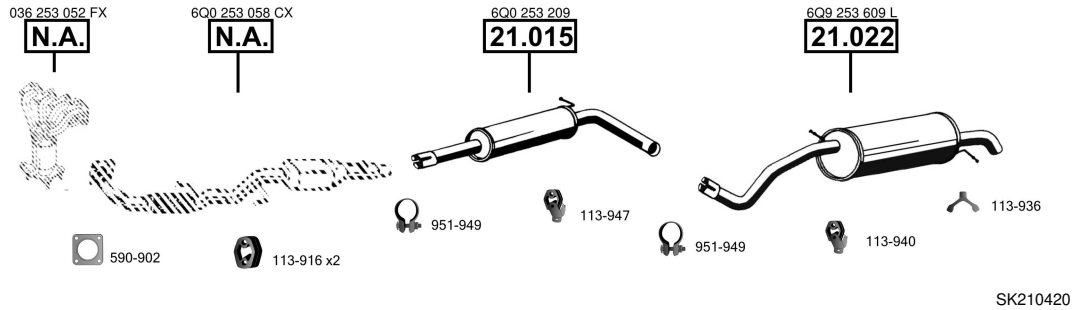

CAT

Fabia
Combi, Sedan
1.4 i - 16V
04/**00**- 12/**07**
(1390 cc), 74 KW

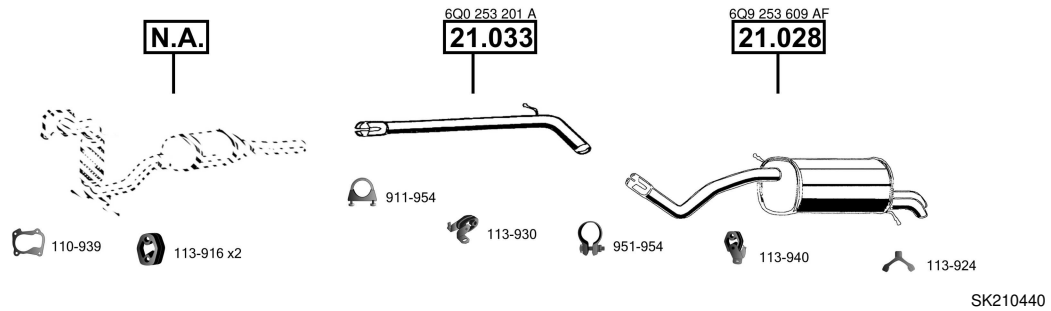

CAT

Fabia
Combi, Sedan
1.4 TDi
Diesel
04/**03**- 12/**07**
(1422 cc), 51 KW
(1422 cc), 55 KW

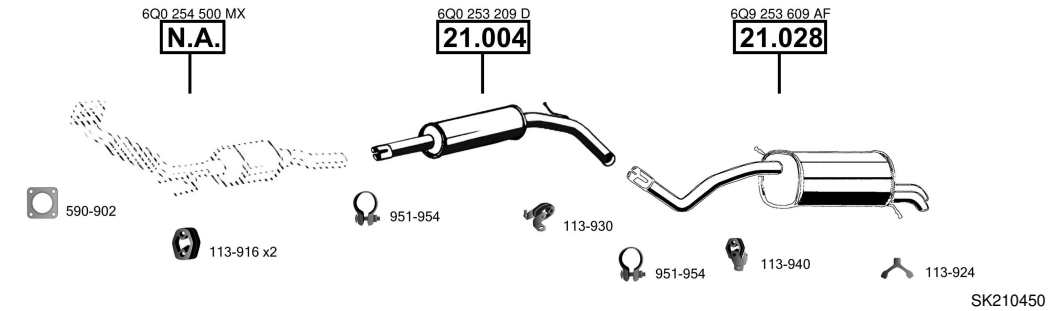

CAT

Fabia
Combi, Sedan
1.9 SDi
Diesel
04/**00**- 12/**07**
(1896 cc), 47 KW

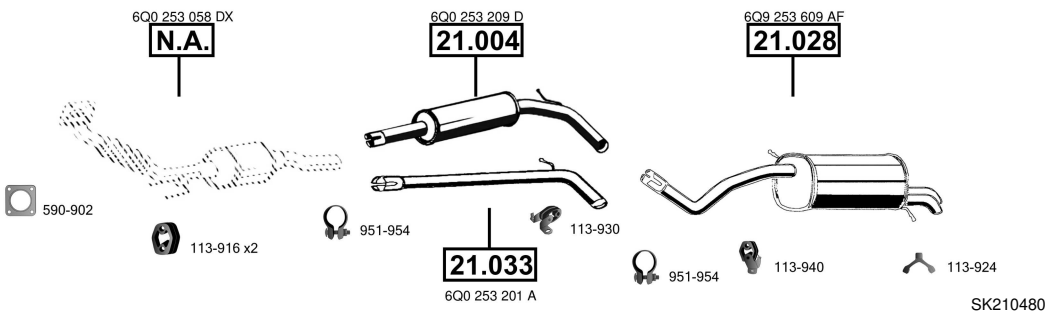

CAT

Fabia
Combi, Sedan
1.9 TDi
Diesel
04/**00**- 12/**07**
(1896 cc), 74 KW

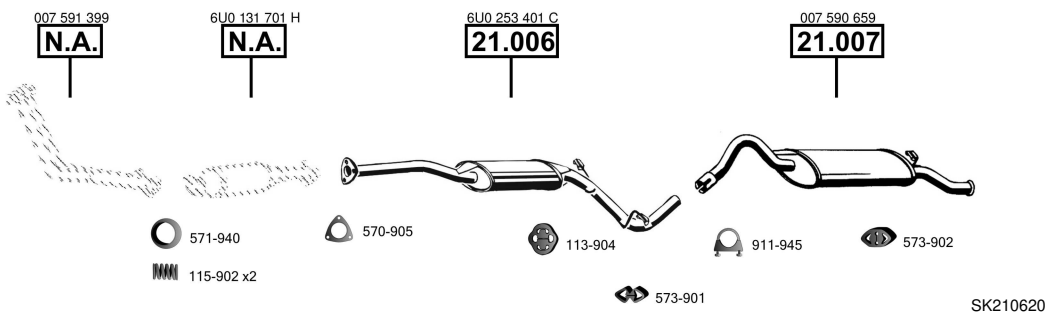

CAT

Favorit
Hatchback
1.3 i
01/**94** - 09/**94**
(1289 cc), 50 KW
(1289 cc), 42 KW

CAT

Favorit
Combi, Pick up
1.3
09/**91** - 06/**95**
(1289 cc), 40 KW
(1289 cc), 44 KW

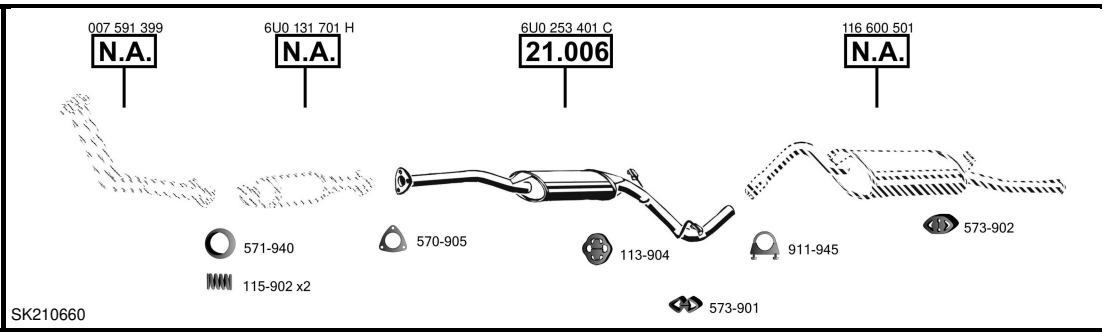

SK210660

CAT

Felicia
Hatchback
1.3
10/**94** - 06/**01**
(1289 cc), 40 KW
(1289 cc), 43 KW

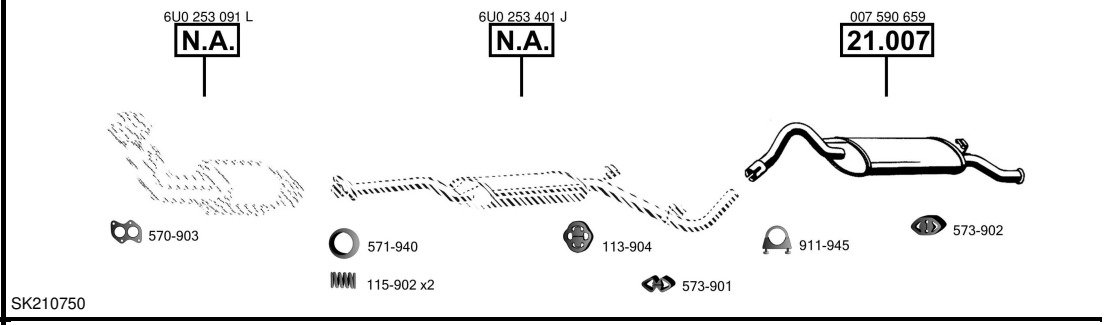

SK210750

CAT

Felicia
Hatchback
1.3 i
10/**94** - 11/**98**
(1289 cc), 50 KW

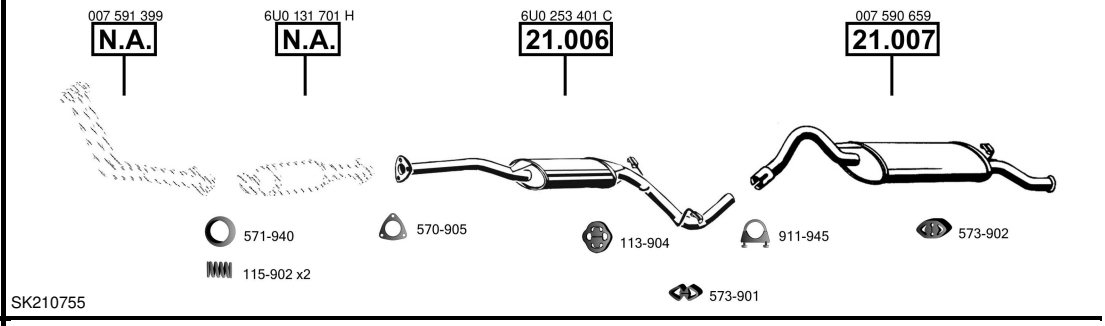

SK210755

CAT

Felicia
Hatchback
1.3 i
11/**98** - 06/**01**
(1289 cc), 50 KW

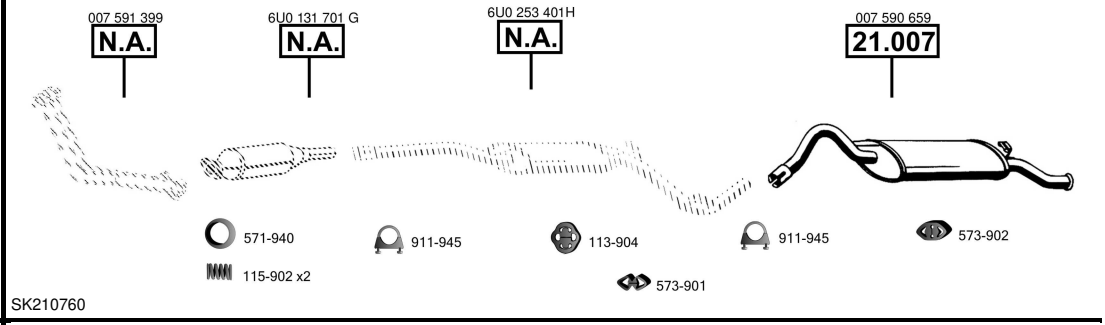

SK210760

CAT

Felicia
Hatchback
1.6 i
08/**95** - 06/**01**
(1598 cc), 55 KW

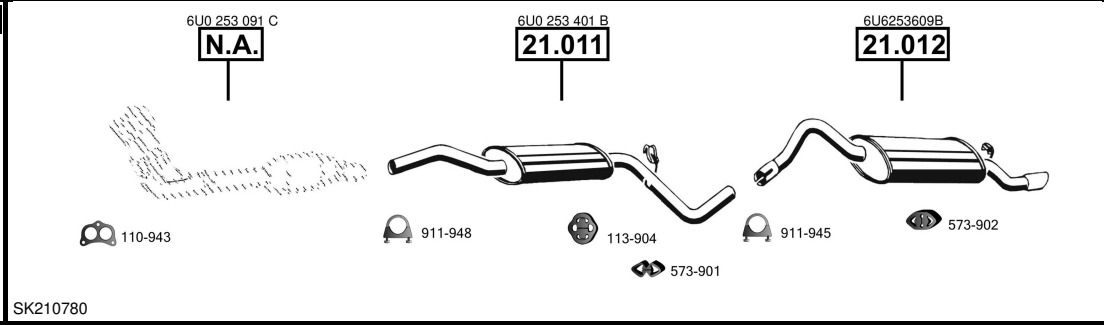

SK210780

CAT

Felicia
Hatchback
1.9 D
Diesel
10/**95** - 06/**01**
(1896 cc), 47 KW

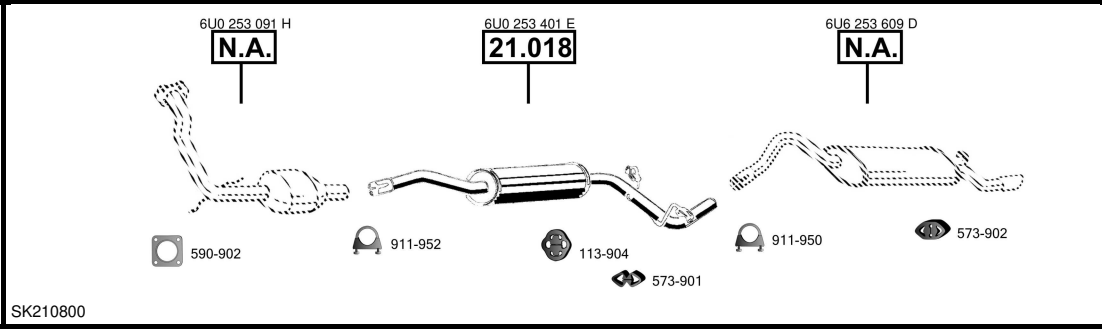

SK210800

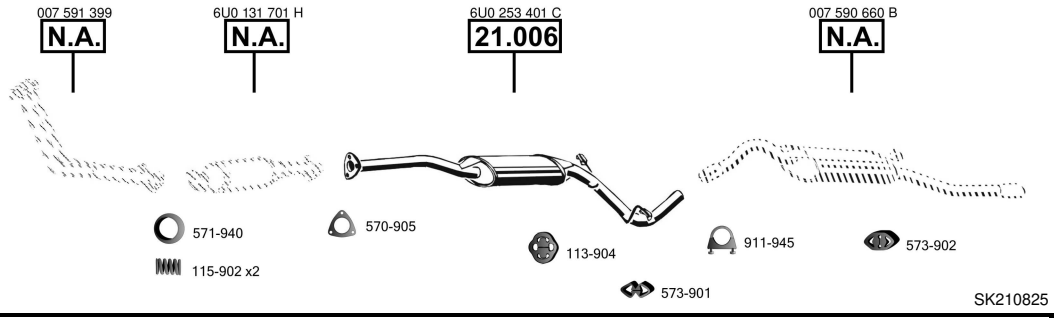

CAT

Felicia
Combi
1.3 i
08/**95** - 11/**98**
(1289 cc), 50 KW

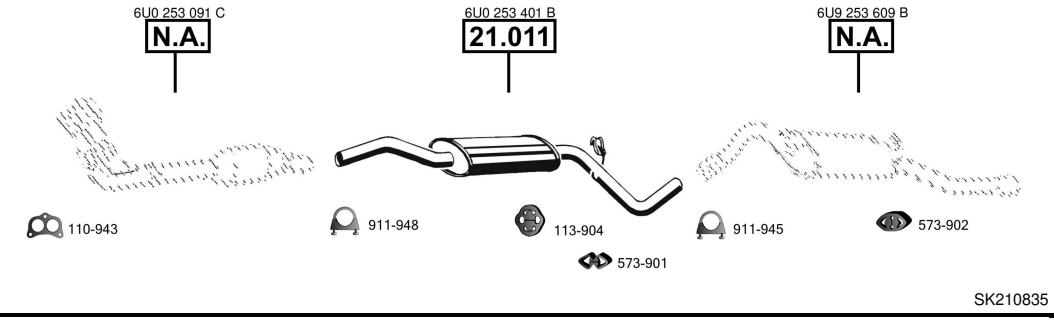

CAT

Felicia
Combi
1.6 i
08/**95** - 06/**01**
(1598 cc), 55 KW

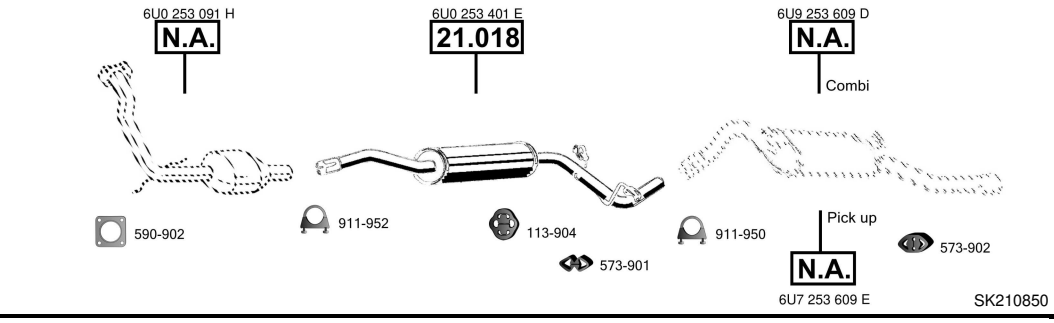

CAT

Felicia
Combi, Pick up
1.9 D
Diesel
10/**95** - 06/**01**
(1896 cc), 47 KW

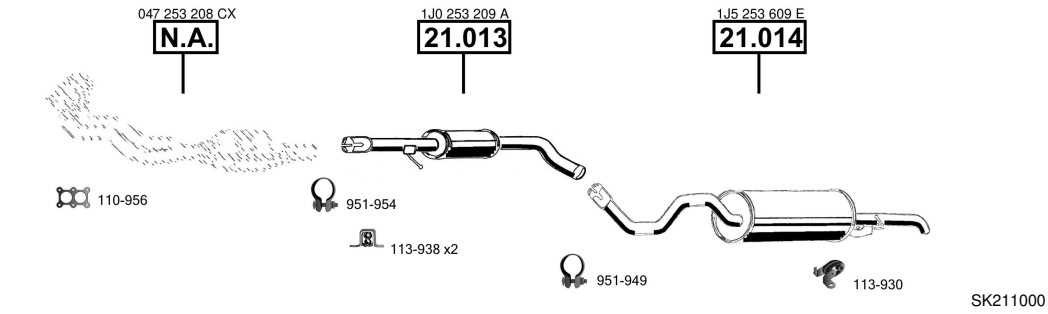

CAT

Octavia
Hatchback
1.4 i
04/**99** - 03/**01**
(1397 cc), 44 KW

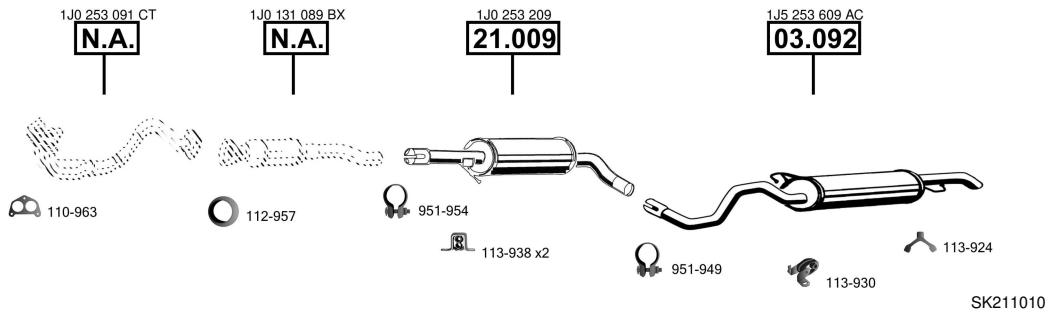

CAT

Octavia
Hatchback, Combi
1.4 i
08/**00** - 12/**10**
(1398 cc), 55 KW

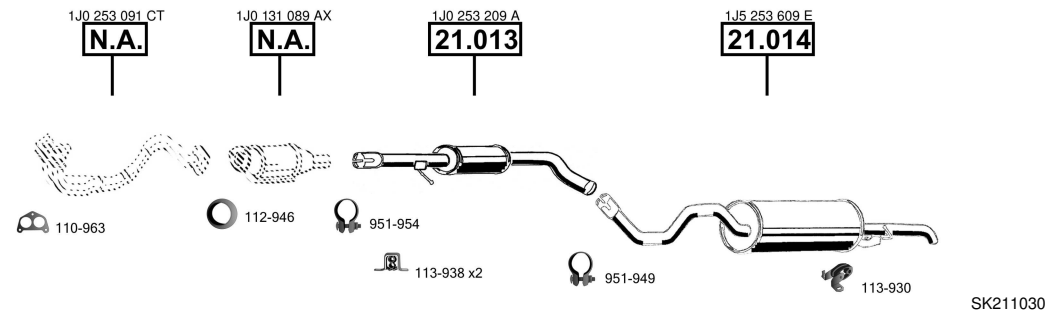

CAT

Octavia
Hatchback, Combi
1.6 i
09/**96** - 09/**04**
(1598 cc), 55 KW

CAT

Octavia
Hatchback, Combi
1.6 i
02/**97** - 12/**10**
(1595 cc), 74 KW
(1595 cc), 75 KW

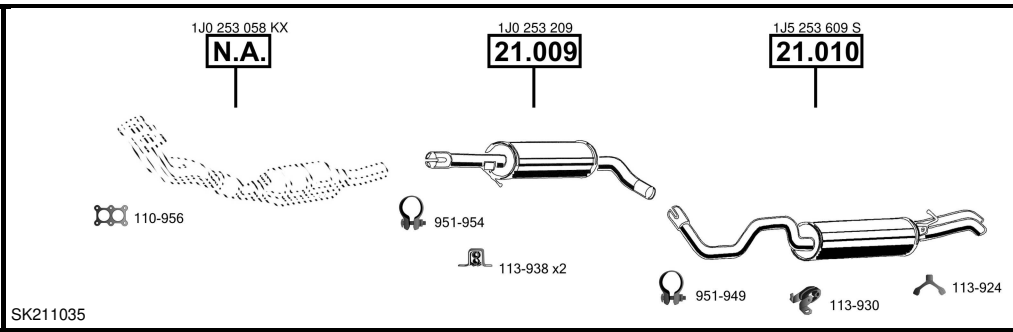

SK211035

CAT

Octavia II
Hatchback, Combi
1.6 i
05/**04**- 10/**08**
(1595 cc), 75 kW

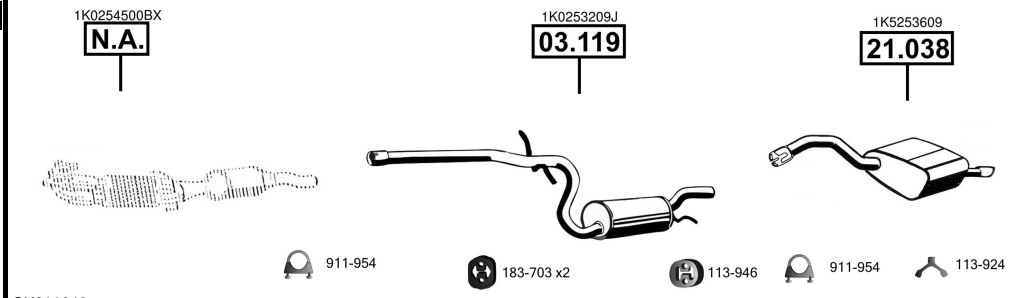

SK211040

CAT

Octavia II
Hatchback, Combi
1.6 i
11/**08**- 06/**13**
(1595 cc), 75 kW

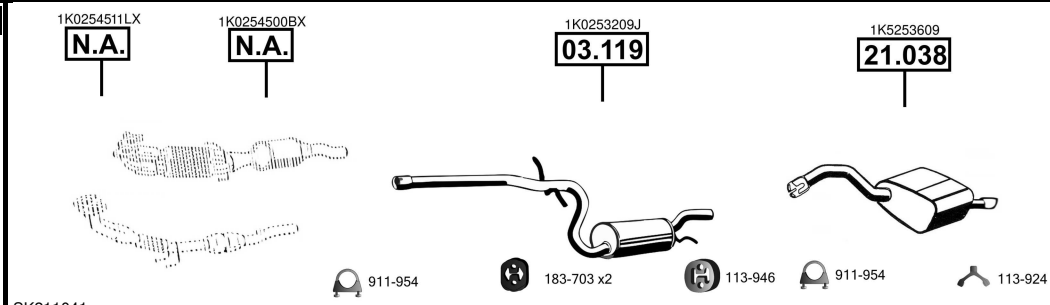

SK211041

CAT

Octavia
Hatchback, Combi
1.8 i - 20V
09/**96** - 07/**00**
(1781 cc), 93 KW

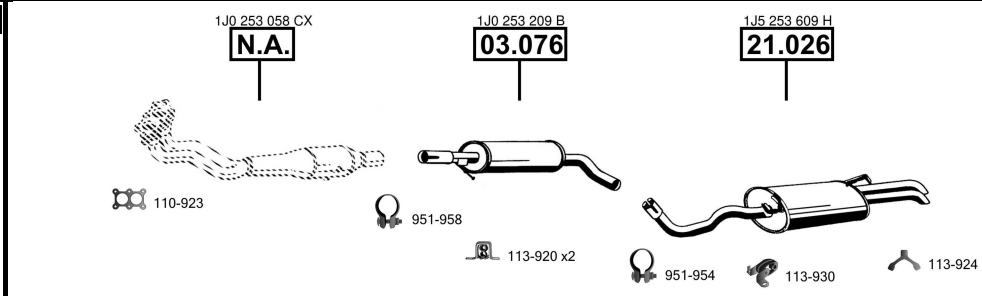

SK211045

CAT

Octavia
Hatchback, Combi
2.0 i
04/**99** - 05/**07**
(1989 cc), 85 KW

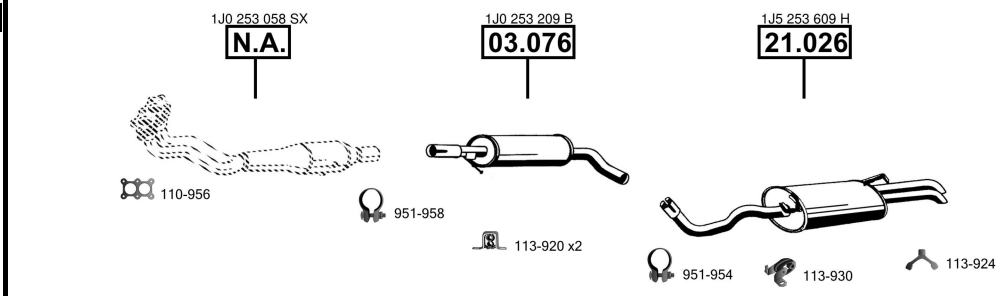

SK211070

CAT

Octavia
Hatchback, Combi
1.9 SDi
Diesel
05/**97** - 12/**03**
(1896 cc), 50 KW

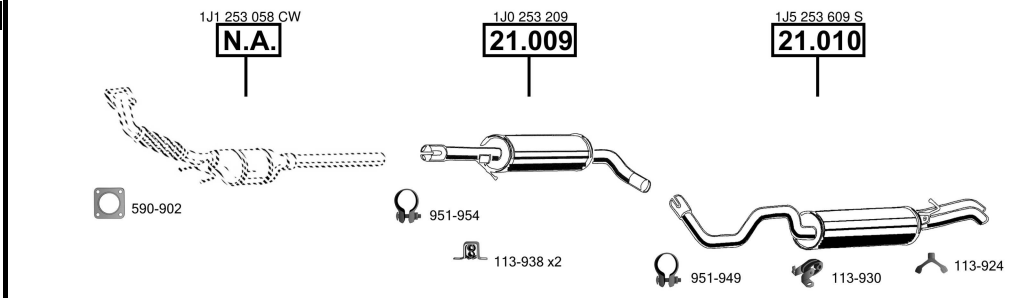

SK211100

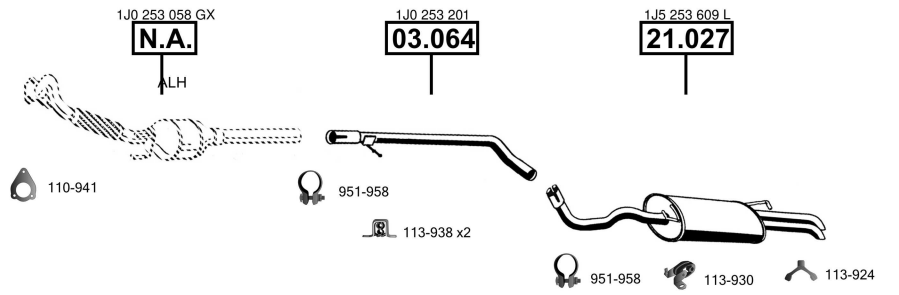

SK211110

CAT

Octavia
Hatchback, Combi
1.9 TDi
Diesel
09/**96** - 03/**10**
(1896 cc), 66 KW
(1896 cc), 74 KW

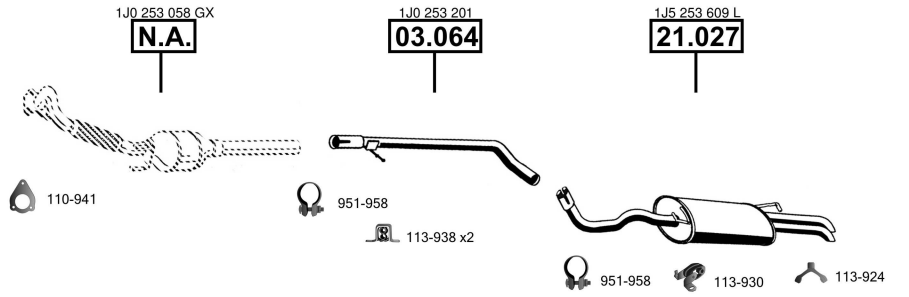

SK211120

CAT

Octavia
Hatchback, Combi
1.9 TDi
Diesel
08/**97** - 01/**06**
(1896 cc), 81 KW

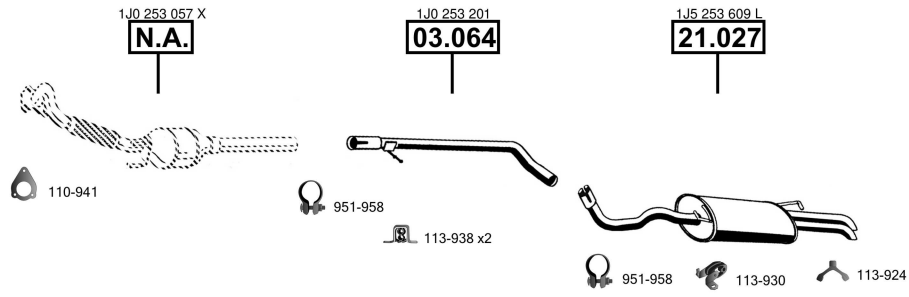

SK211130

CAT

Octavia
Hatchback, Combi
1.9 TDi
Diesel
09/**02** - 09/**04**
(1896 cc), 96 KW

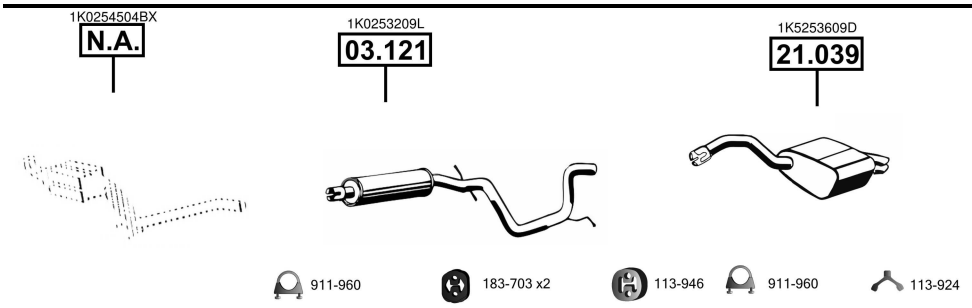

SK211135

CAT

Octavia II
Hatchback, Combi
1.9 TDi
Diesel
02/**04**- 04/**13**
(1896 cc), 77 kW

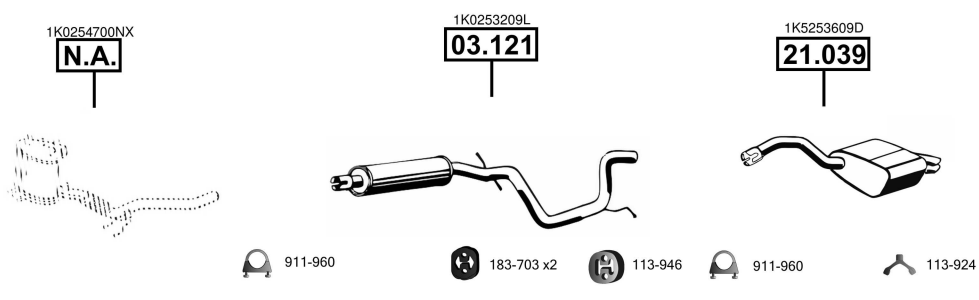

SK211136

DPF

Octavia II
Hatchback, Combi
1.9 TDi
Diesel
02/**04**- 04/**13**
(1896 cc), 77 kW

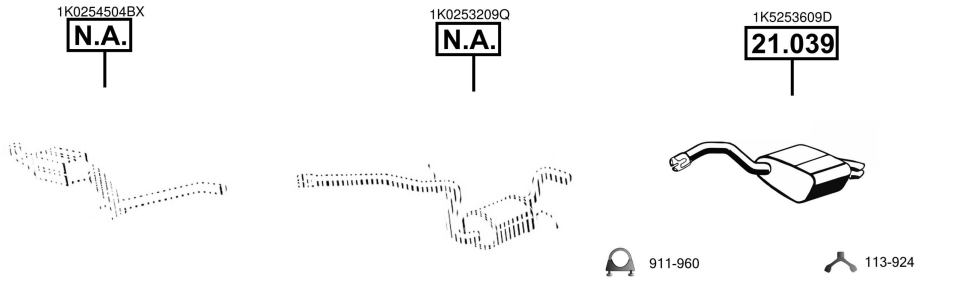

SK211137

CAT

Octavia II
Hatchback
2.0 TDi
Diesel
02/**04**/ 05/**10**
(1968 cc), 100 kW
(1968 cc), 103 kW

DPF

Octavia II
Hatchback
2.0 TDi
Diesel
11/**05**- 05/**10**
(1968 cc), 103 kW

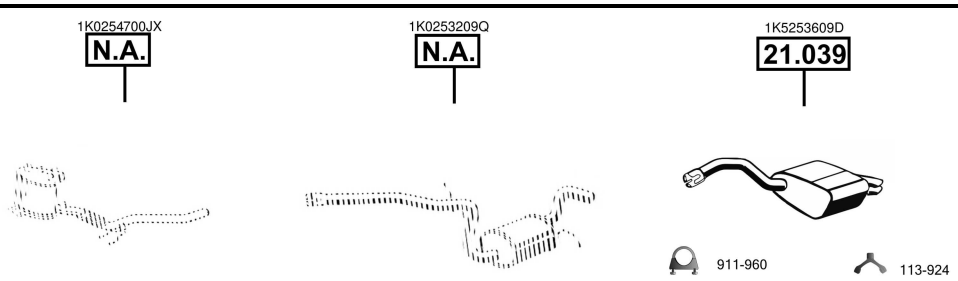

SK211138

CAT

Rapid
Liftback
1.0 TSi
06/**17**- 12/**19**
(999 cc), 70 kW;
(999 cc), 81 kW;

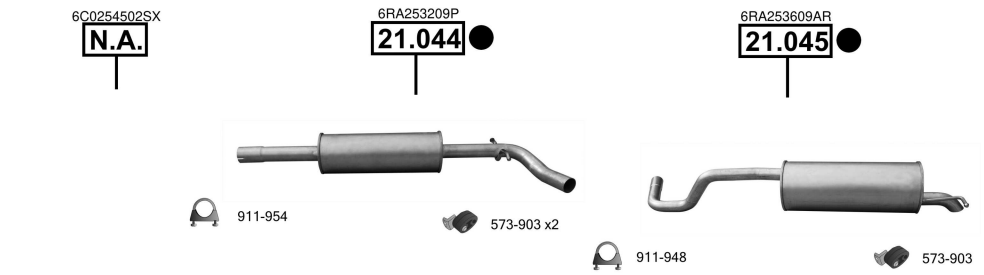

SK211300

CAT

Rapid
Liftback
1.2 TSi
07/**12**- 05/**15**
(1197 cc), 63 kW;
(1197 cc), 77 kW

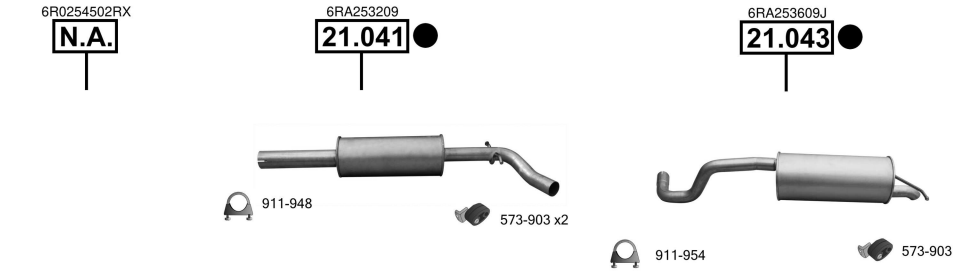

SK211330

CAT

Rapid
Liftback
1.2 TSi
05/**15**- 12/**19**
(1197 cc), 66 kW;
(1197 cc), 81 kW;



SK211340

CAT

Roomster
MPV
1.2 TSi
03/**10**- 05/**15**
(1197 cc), 63 kW
(1197 cc), 77 kW

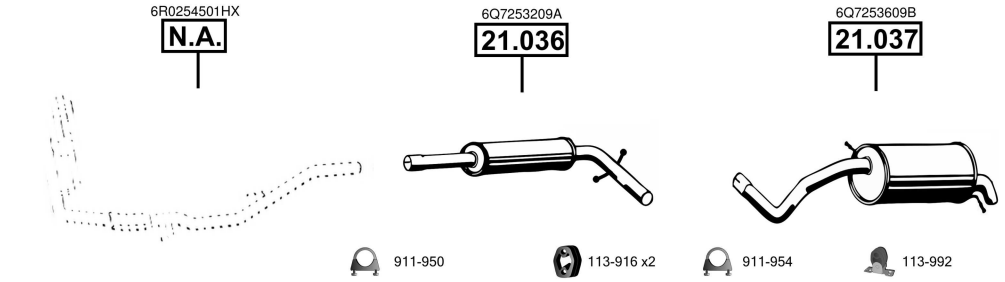

SK212000

CAT

Roomster
MPV
1.4 i
05/**06**- 05/**15**
(1390 cc), 63 kW

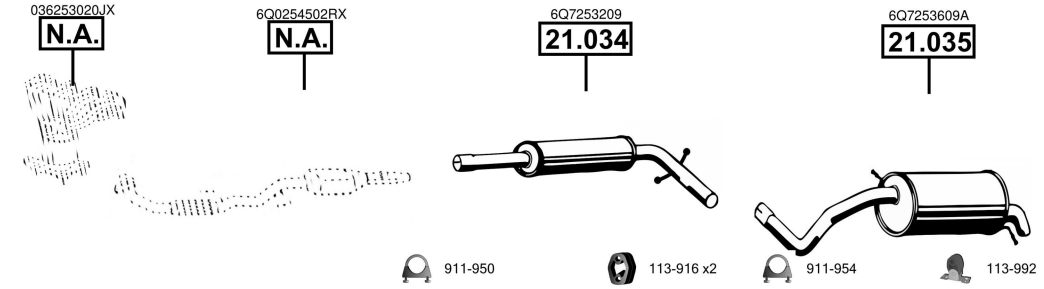

SK212050

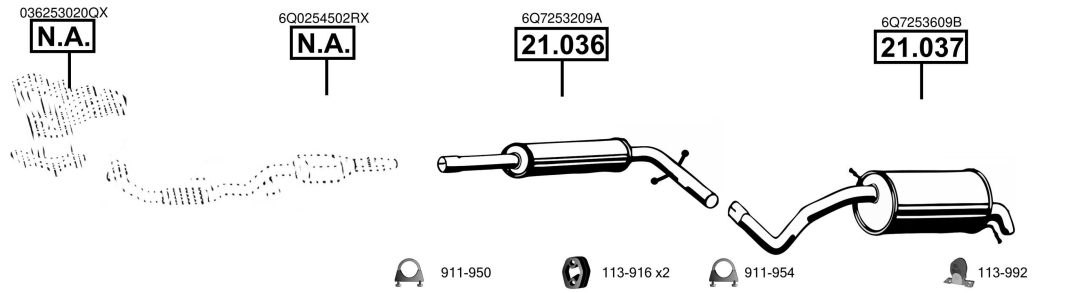

CAT

Roomster
MPV
1.6 i
05/**06**- 05/**15**
(1598 cc), 77 kW

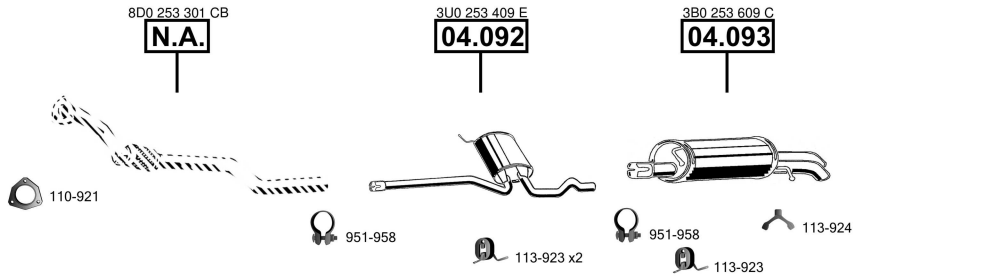

CAT

Superb
Sedan
1.8 T
12/**01** - 03/**08**
(1781 cc), 110 KW

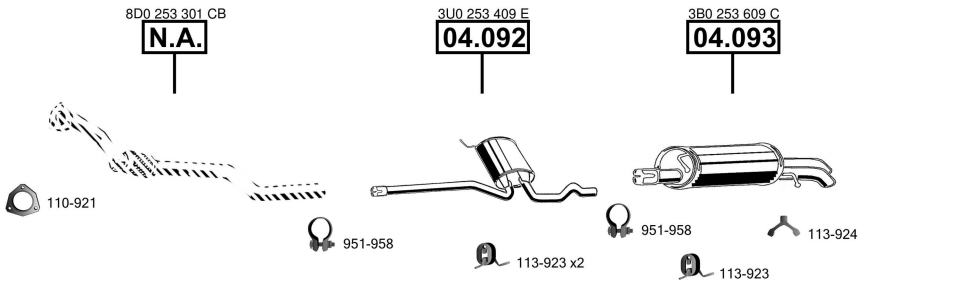

CAT

Superb
Sedan
2.0 i - 16V
12/**01** - 03/**08**
(1984 cc), 85 KW

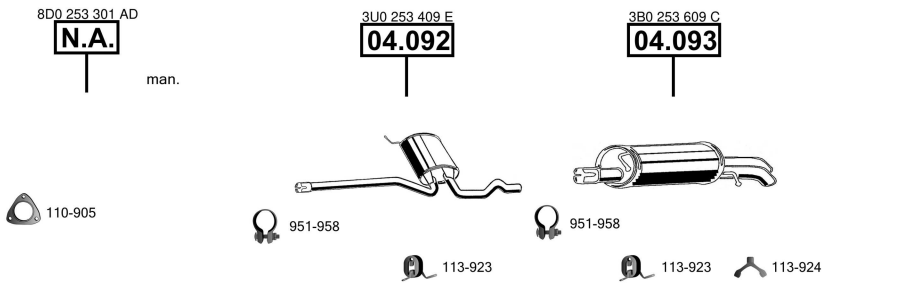

CAT

Superb
Sedan
1.9 TDi
Diesel
12/**01** - 03/**08**
(1896 cc), 74 KW
(1896 cc), 85 KW

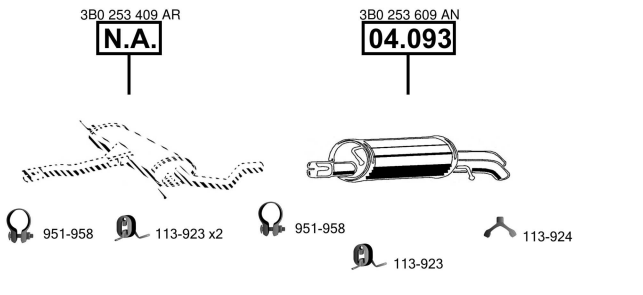

CAT

Superb
Sedan
2.0 TDi
Diesel
10/**05** - 03/**08**
(1968 cc), 103 KW

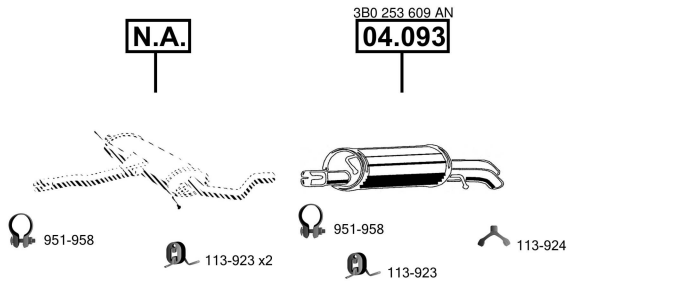

CAT

Superb
Sedan
2.5 TDi
Diesel
12/**01** - 03/**08**
(2496 cc), 114 KW
(2496 cc), 120 KW